IF IN DOUBT ASK.....MME.....

DO NOT SCALE THE DRAWING

ALL DIMENSIONS ARE IN mm UNLESS OTHERWISE STATED

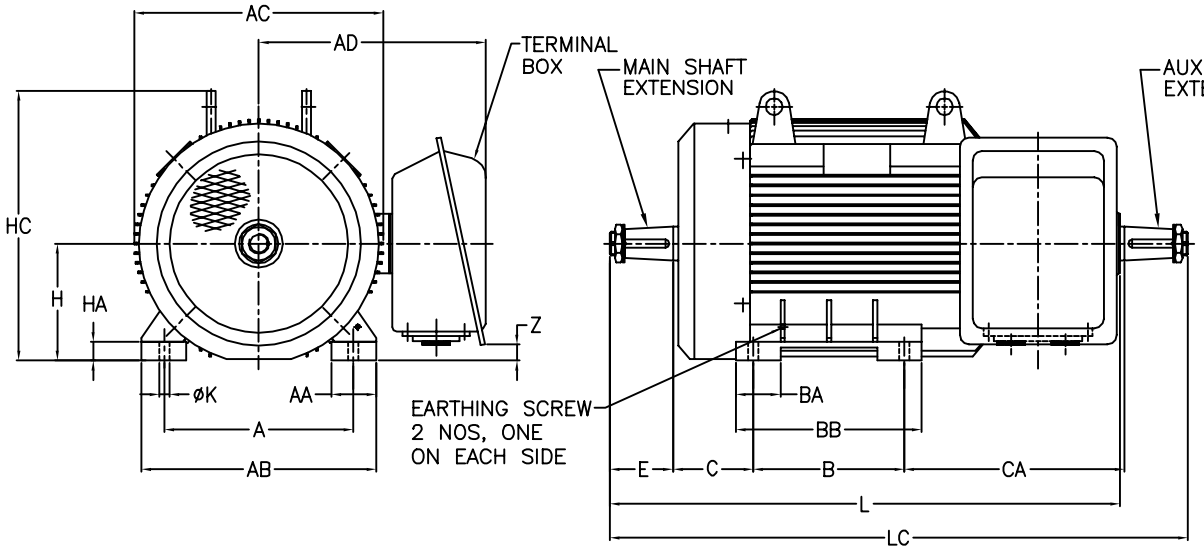

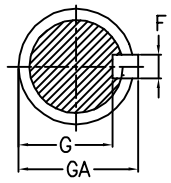

SECTION XX

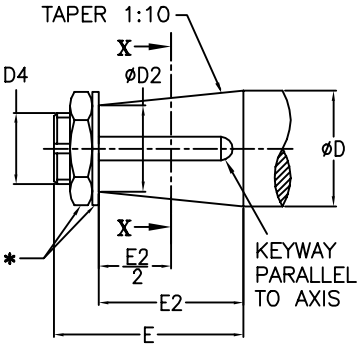

SHAFT EXTENSION DETAILS

NOTE:–

1. TOLERANCE ON 'H': $^{+0.0}_{-1.0}$
2. DIMENSIONS ARE AS PER IPSS.
3. * NUTS AND LOCK WASHERS WILL BE SENT ALONG WITH MOTOR.
4. TERMINAL BOX CAN BE ROTATED THROUGH 360° IN STEPS OF 90°.
5. DEGREE OF PROTECTION IP:55.
6. MAIN AND AUXILIARY SHAFT EXTENSIONS ARE IDENTICAL.

ID355L	610	630	254	100	83.5	M72X4	210	165	25	86.9	100.9	355	28	1715	1935	125	710	705	660	200	780	631	55	720	25	2100	2300	2200	1230	930
ID355M	610	560	254	100	83.5	M72X4	210	165	25	86.9	100.9	355	28	1645	1865	125	710	705	660	200	710	631	55	720	25	1975	2175	2100	1230	930
FRAME	A	B	C	D	D2	D4	E	E2	F	G	GA	H	K	L	LC	AA	AB	AC	AD	BA	BB	CA	HA	HC	Z	NETT	GROSS	Ln	Br	Ht
																										WEIGHT IN kg		SHIPPING DIMNS.		

REV.	ZONE	BRIEF RECORD	SIGNATURE	DATE
R1	A,B-1	BEARING SIZE DEATILS REMOVED		08/01/2003

ALL INFORMATION CONTAINED IN THIS DOCUMENT IS CONFIDENTIAL AND THE PROPERTY OF KIRLOSKAR ELECTRIC CO. LTD. REPRODUCTION OF THESE IN ANY FORM IS TO BE DONE WITH THE SPECIFIC PERMISSION OF THE COMPANY.

	DRAWING No.	FROM DT.	SIGN & DATE.
THIS SUPERSEDES	———	———	———
THIS IS SUPERSEDED BY	———	———	———

MKTG. AC MOTORS

PRINTS ISSUED TO

CUSTOMER / O/A No.

SCALE NTS

USED ON / TYPE CRANE DUTY MOTORS
SIDE TERMINAL BOX – RHS FROM DE (IM1004)

TITLE: DIMENSIONAL DRAWING

DRAWN 97/08/25
CHECKED 97/08/25
APPROVED 97/08/25

31116297 R 1

SHEET NO. ONE OF ONE

KIRLOSKAR ELECTRIC COMPANY LTD. BANGALORE – 560055 (INDIA)

FORM No. 11401038